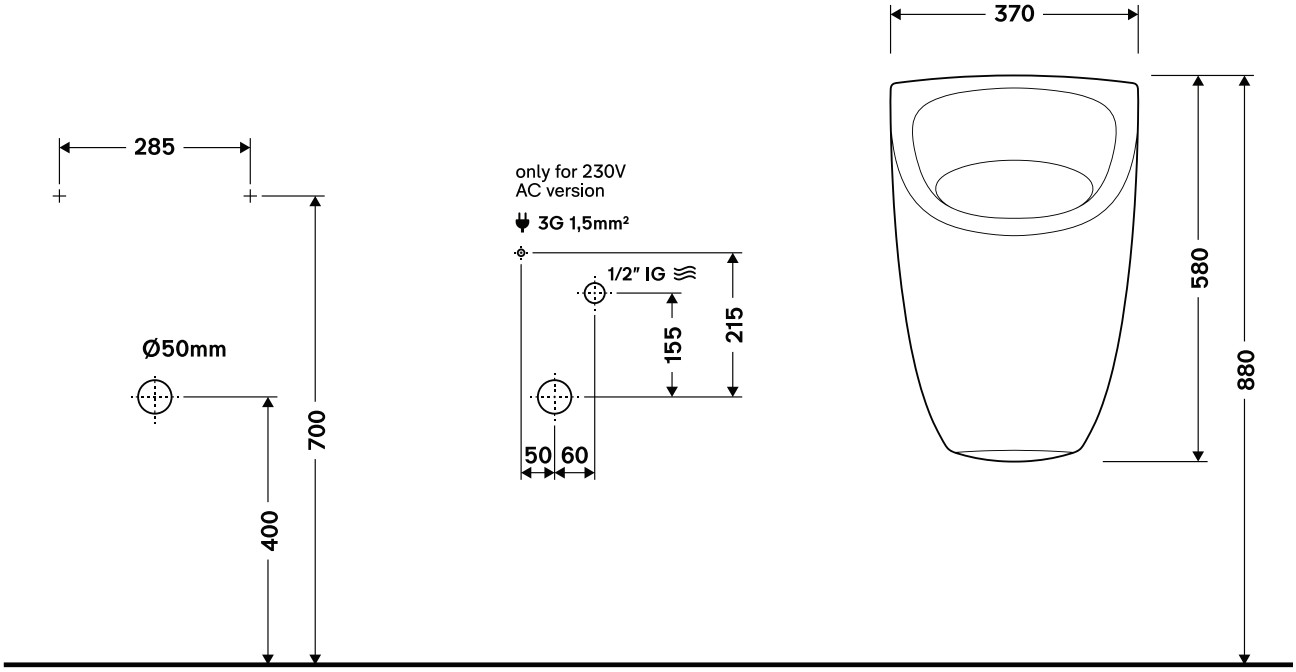
285
Ø50mm
400
700
only for 230V
AC version
3G 1,5mm²
1/2" IG
155
215
50
60
370
580
880